⊘—⊘	JQ2-2.5	—	RV1.0mm2
⊘	JUT2-2.5	—/—	RV2.5mm2
—▭—	JUT2-4RD	—⊘—	DZ47-60

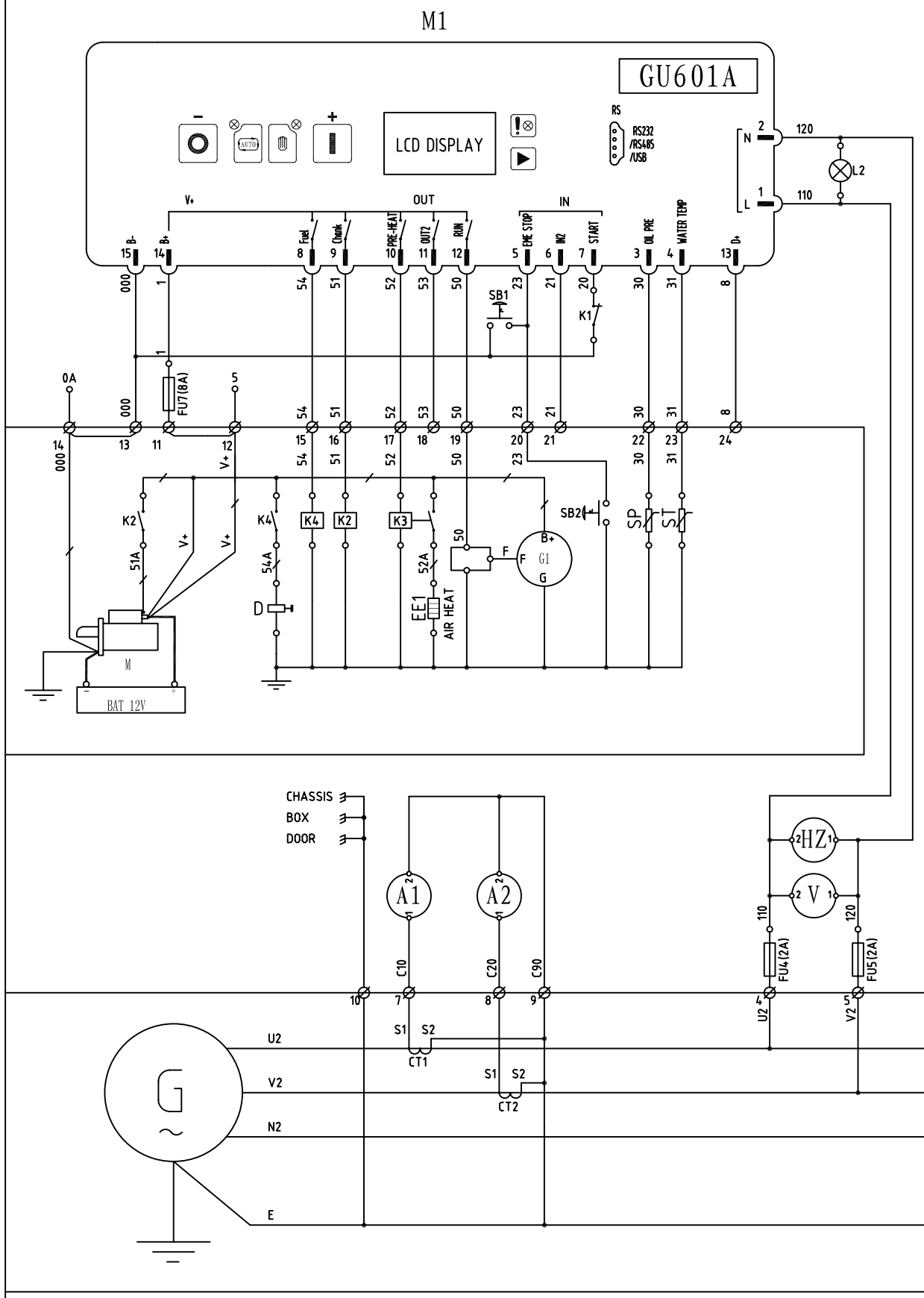

XT

1	2	3	4	5	6	7	8	9	10	11	12	13	14	15	16	17	18	19	20	21	22	23	24
210	220	230	110	120	130	C10	C20	C90	PE	1	5	000	0A	54	51	54	52	50	23	21	30	31	8
U1	V1	V1	U2	V2	V2	I1	I2	IN	PE	B+	B+	B-	B-	STOP	CRANK	STOP	PRE-HEAT	RUN	E.STOP	OIL PRE	WATER TEMP		

DC12V 120/240V	TIDE2.0+ATS	DIAGRAM	GU601A LQ3M 200A
Designed	Approved	Tide Power	TK-222-00-11DT1
Checked	Date		